Explored view of X4

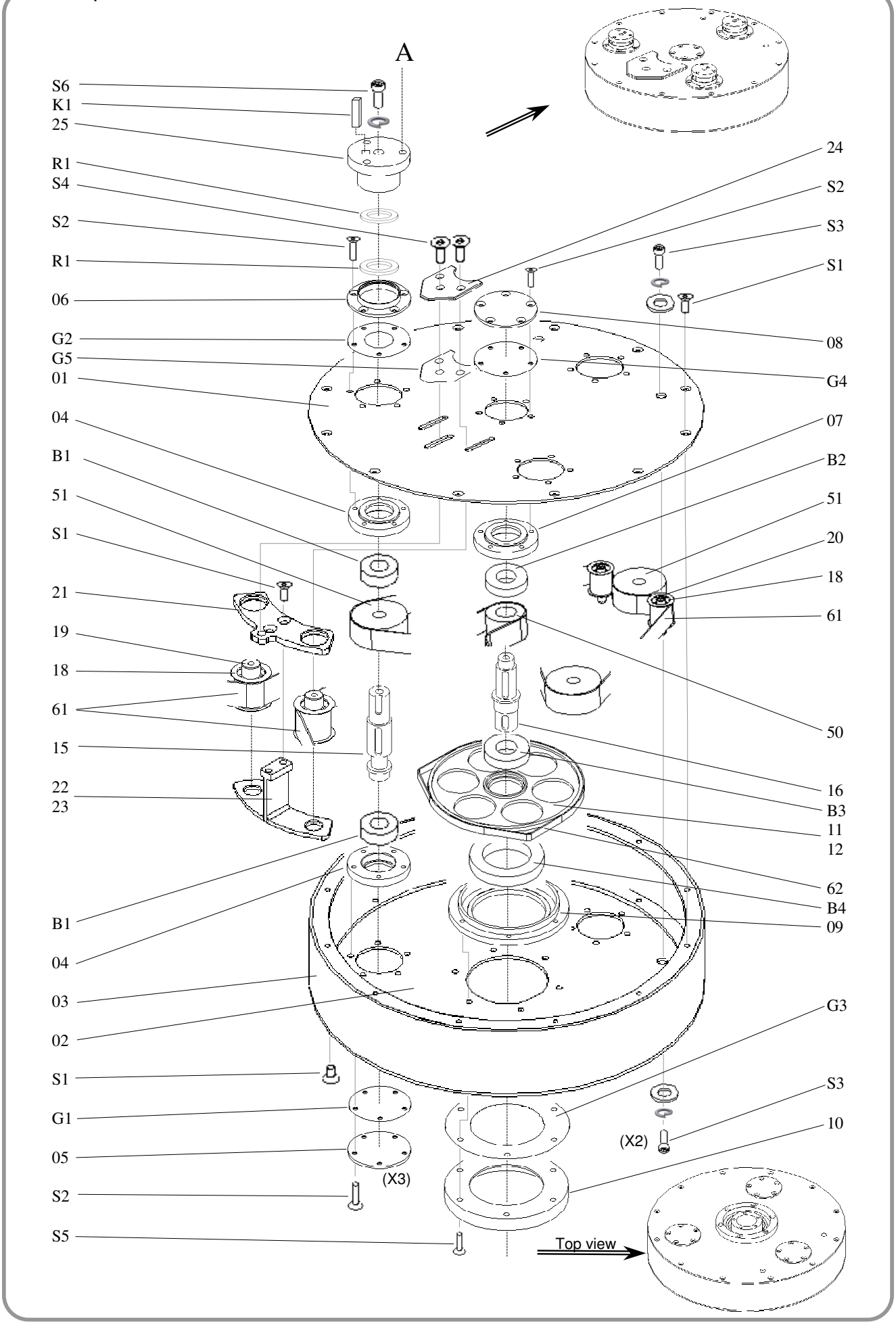

Explored view of X4

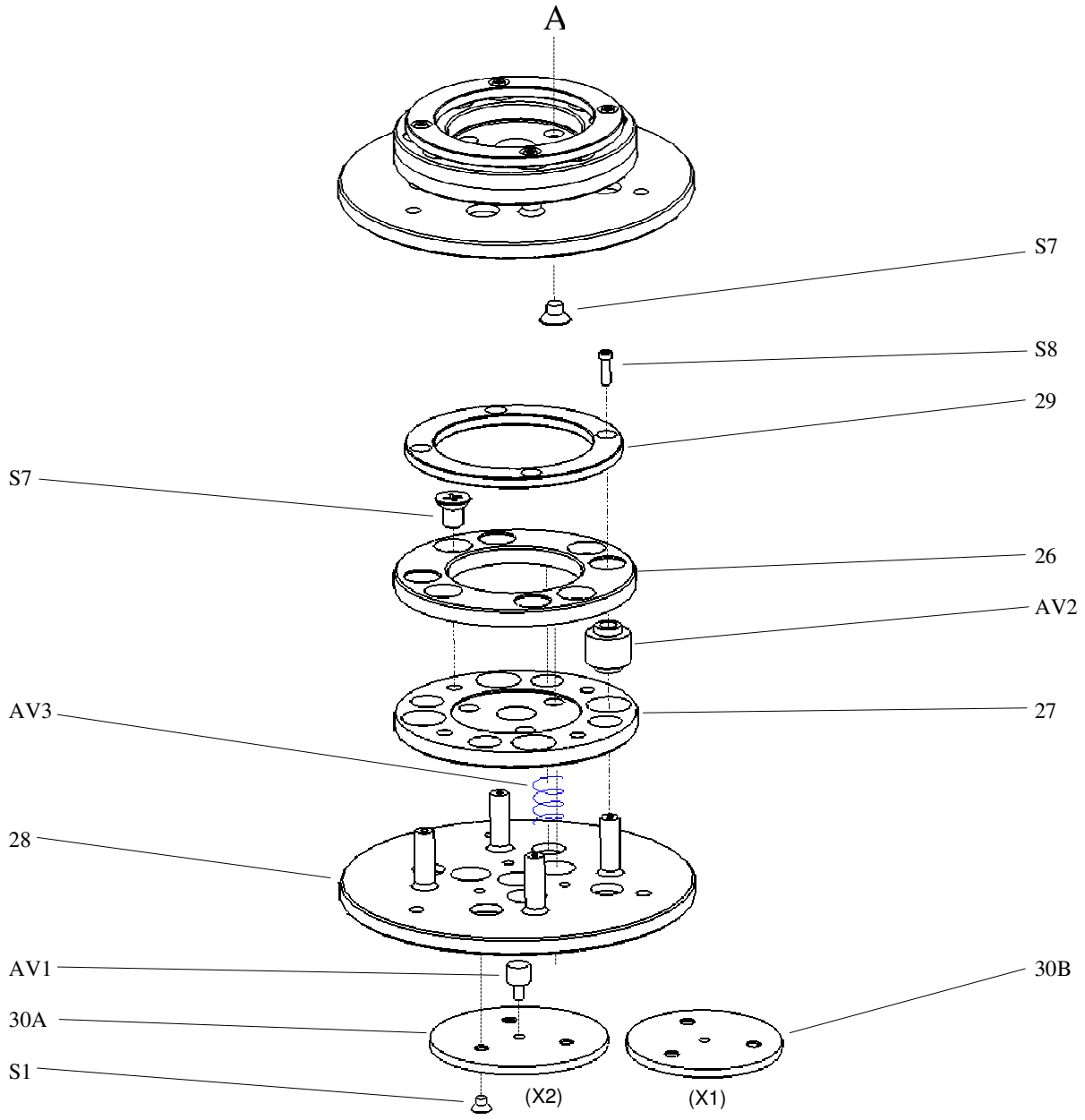
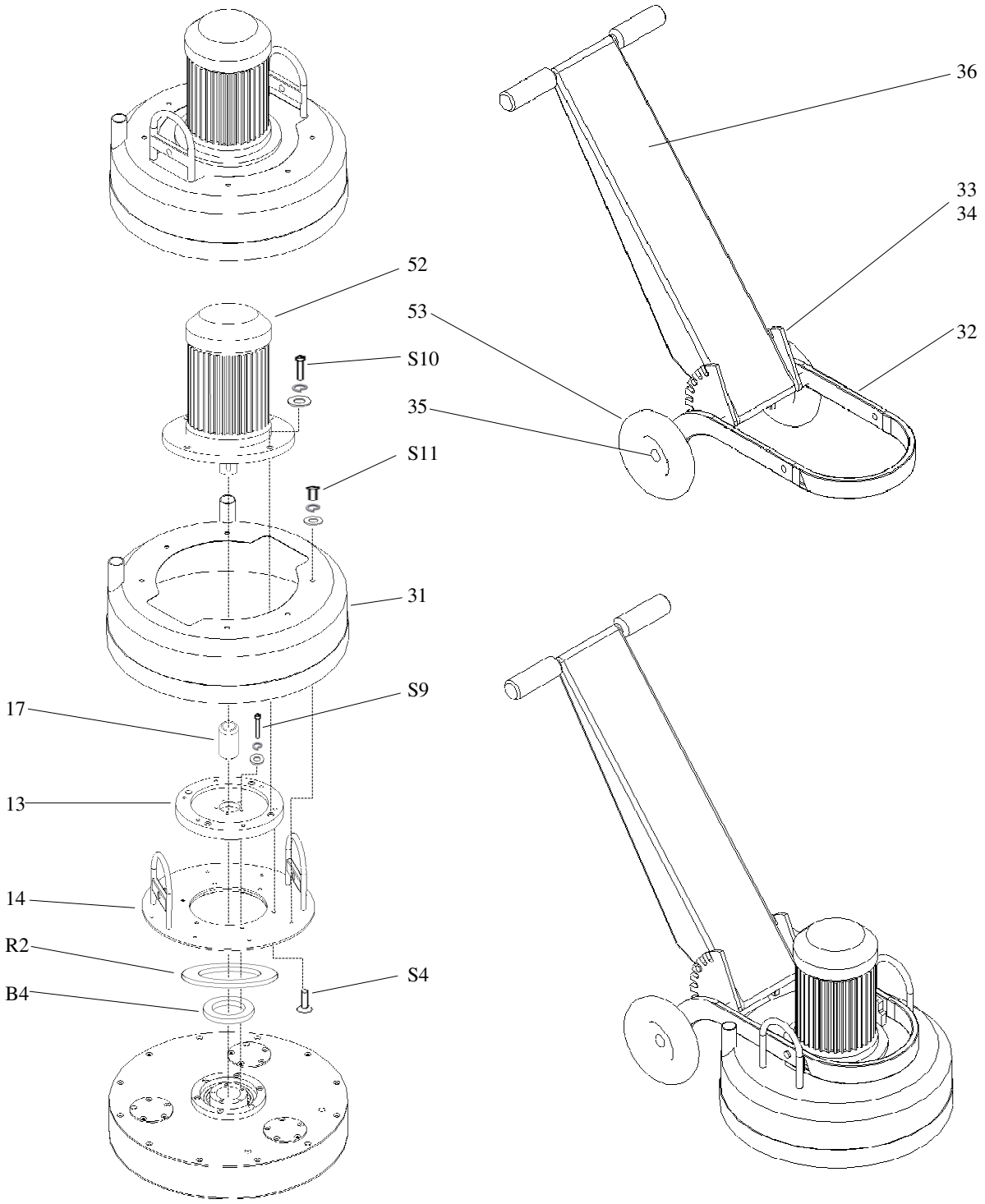
Explored view of X4